WATERMAIN CORROSION CONTROL

CATHODIC PROTECTION SYSTEM DESIGN

Robert Wakelin, P.Eng.
Corrosion Service Company Limited
Downsview, Ontario

September 1988
Toronto, Ontario

1.0 Introduction

This paper outlines the procedures used in designing a cathodic protection system for new or existing iron water piping. Both sacrificial and impressed current systems are discussed, and design examples for various applications of these systems are also given (see Appendix D).

2.0 Choosing theType of Cathodic Protection System

Cathodic protection current may either be supplied by sacrificial anodes or impressed current sources.

For soils applications, a sacrificial anode consists of either a zinc or magnesium core packaged in a low resistivity backfill. The weight of the anode core determines the life of the anode, whereas the dimensions of the package determine its resistance, and hence its current output. A sacrificial system can either consist of individual anodes installed along the length of the watermain at close even spacings (distributed system), or groups of anodes with relatively long spacings between each anode bed (point source system).

An impressed current system uses corrosion resistant anodes powered by an external source of DC current. The anode outputs are limited only by the size of the current source, although other practical limitations exist regarding the effective distribution of this current to the water piping.

Although a thorough discussion of the advantages and disadvantages of each type of system is beyond the scope of this paper, the following list outlines some of the factors which affect the choice of system:

- Zinc anodes have a lower driving voltage than magnesium anodes and are only suitable when either the soil resistivity is low ($\leq$ 1000 Ω-cm) or when the current requirements are low (metallic fittings on non-metallic piping systems).

- A system may be installed on an existing ductile iron main by placing the anodes into holes augered directly on top of the main, but this procedure is not advisable on grey cast iron mains.

- When electrical continuity along the watermain is lacking, a distributed system delivers current more effectively to all pipe sections than does a point source system.

- The total anode current in a distributed system cannot be practically interrupted to allow for the measurement of polarized ('IR' error free) pipe potentials, nor can the current be easily measured.

- Impressed current systems require more frequent maintenance than do sacrificial systems, and have the potential to create stray current interference with other structures if not properly designed and monitored.

3.0 System Design

The flowchart in Figure 1 illustrates the basic procedure used in designing a cathodic protection system.

The design process is an iterative one in which an initial approach is chosen, the calculations are performed for that particular approach, and then the design is evaluated in terms of practicality and cost effectiveness. If the final design is unacceptable, a different approach is used and the calculations are repeated. For example, a design may be based on the initial selection of a particular anode, but once the calculations are performed, the anode life may be considered unacceptably short, so the calculations are repeated based on the selection of a larger anode.

The order of the design steps given in the flowchart is the most common progression followed when designing a system, but it is not inflexible. For instance, rather than first selecting a particular type of anode, a desired anode spacing might be chosen, and the required anode type would be determined upon completion of the calculations.

There is actually little difference in the design procedures followed for sacrificial and impressed current systems, although the order in which the design steps are followed is generally different. With a sacrificial system, however, the number of anodes and the anode resistances are crucial to the success of the design, since the choice of driving voltages for the system is very limited. With an impressed current system, on the other hand, the power supply can be chosen to provide any driving voltage desireable, so that the spacing and design of the anodes is more flexible.

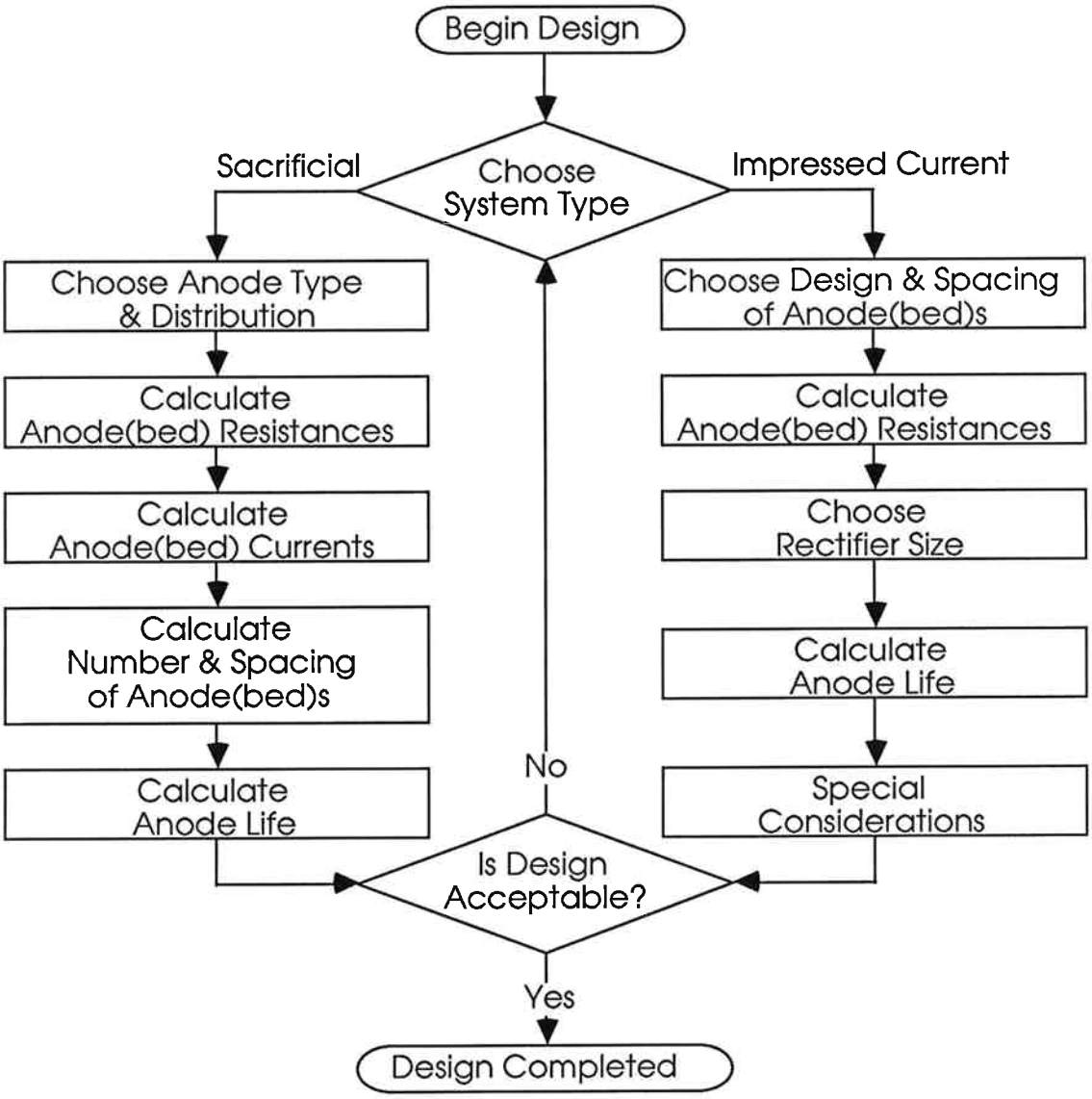

Figure 1 - Cathodic Protection Design Procedure

3.1 Determination of the Total Required Current

In most soils, between one and three milliamperes of current is required to cathodically protect one square foot of bare metal. Although in-situ current requirement testing can be conducted on existing piping to more accurately determine this value, this is not possible when planning installations for future piping systems. For most cases, however, it is generally accepted that a current density of $1 mA/ft^2$ is sufficient, and then it only becomes necessary to calculate the total surface area of metal exposed to the soil.

$$I_T = \text{Bare Metal Area} \times 1 mA/ft^2 \qquad \ldots \{1\}$$

While it may only be desired to protect the watermains and services from corrosion, any buried metallic structure which is electrically continuous with the water piping will also receive some protective current. Ground rods and bare concentric neutral cables accept current by virtue of their interconnection to the water service piping through the electrical neutral network, and their surface areas must therefore be included in the calculation.

Cathodically protecting a coated pipe requires less current than protecting a bare pipe, since only the metal exposed at coating defects receives current. Ductile iron piping is usually supplied with a factory applied coating, but the coating is typically of poor quality and it is best to consider the pipe as being bare for the purpose of this calculations.

3.2 Anode Resistance Calculations

3.2.1 Resistance of an Individual Anode

The resistance between an anode and the water distribution piping can be approximated by calculating the anode's resistance to remote earth (see Appendix C) as follows:

Horizontal Anode:

$$R_{ah} = \frac{\rho}{2\pi L}\left(\ln\frac{4L}{d} - 1 + \ln\frac{L+\sqrt{4D^2+L^2}}{2D} + \frac{2D}{L} - \frac{\sqrt{4D^2+L^2}}{L} \right) \quad \ldots \{2\}$$

Vertical Anode:

$$R_{av} = \frac{\rho}{2\pi L}\ln\left(\frac{2L}{d}\sqrt{\frac{4D+3L}{4D+L}} \right) \quad \text{On the condition that: } \{L,D\} >> d \quad \ldots \{3\}$$

where:

ρ = soil resistivity

L = anode length

d = anode diameter

D = depth to top of anode

Sacrificial anodes are generally prepackaged in a special backfill. Assuming that the backfill resistivity is low (less than 50 ohm-cm), the anode resistance is governed primarily by the package dimensions rather than by the bare anode dimensions (see Appendix B), and for this reason, the package dimensions should be used in the above calculations. Table 1 of Appendix A gives some typical resistances for a variety of anodes.

3.2.2 Resistance of an Anode Bed

The resistance to remote earth of an anode bed composed of a linear array of anodes is calculated as the parallel combination of the individual anode resistances, multiplied by an interference factor. This interference factor accounts for the mutual resistances between anodes arising from their proximity to one another, and since this factor is always greater than unity, the total anode-bed resistance is always more than the parallel combination of the individual anode resistances.

For a linear array of anodes, the total anode bed resistance can be approximated as follows:

$$R_N = \frac{1}{N}\left(R_a + \frac{\rho}{\pi S}\ln(0.66N)\right) \qquad \ldots \{4\}$$

where:

R_N = resistance of anode bed

R_a = resistance of one anode

N = number of anodes

S = spacing of anodes

ρ = soil resistivity

Although equation {4} is intended for use with beds of vertical anodes, it may also be applied to beds of horiziontal anodes; however, if the spacing of the horizontal anodes becomes much less than the anode length itself, it is better to use equation {3} and consider the bed as being one continuous horizontal anode having a length equal to the total length of the anode bed.

3.3 Satisfying the Current Requirements

3.3.1 Sacrificial System - Number and Spacing of Anodes

The output current of a sacrificial anode is calculated as follows:

$$I_a = \frac{V_d}{R_a} \qquad \ldots\{5\}$$

where: V_d = anode driving voltage

R_a = anode resistance

The driving voltage is the open-circuit potential of the particular alloy used, minus the polarized potential of the pipe it protects (see Figure 2). Assuming that the pipe polarizes to -850 mV with respect to a $Cu:CuSO_4$ refererence electrode, the driving voltages for the most common alloys are as shown in Table 2 of Appendix A.

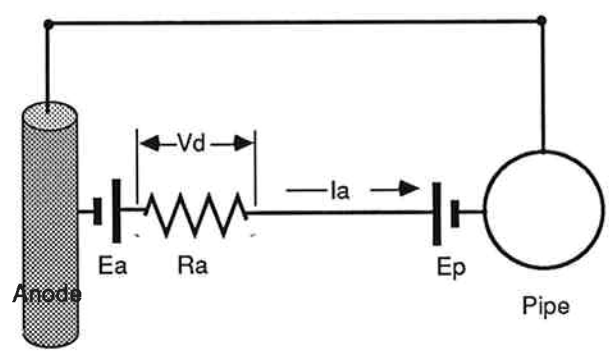

Figure 2 - Equivalent Circuit of a Sacrificial Cathodic Protection System

The number of sacrificial anodes required to protect a section of piping is therefore

$$N = I_T / I_a \qquad \ldots\{6\}$$

where: I_T = total required current ... from {1}

I_a = individual anode current ... from {5}

The anodes are then evenly spaced along the pipe at a separation determined by

$$S = L / N \qquad \ldots\{7\}$$

where: L = length of iron piping to be protected

N = number of anodes ... from {6}

3.3.2 Impressed Current - Sizing the Impressed Current Power Supply

The driving voltage of an impressed current system is controlled by the rectifier and not the potential of the anode material used (see Figure 3). Therefore, the required rectifier size can be determined as follows:

$$I_R = I_T \qquad \ldots \{8\}$$

$$V_R = I_R \times R_a \qquad \ldots \{9\}$$

where:

I_R = rectifier current rating

V_R = rectifier voltage rating

I_T = total current required ...from {1}

R_a = anode(bed) resistance ...from{2,3,4}

If it is desirable from a current distribution point of view to share the total required current among a number of impressed current sources, then equations {6} and {7} may be used.

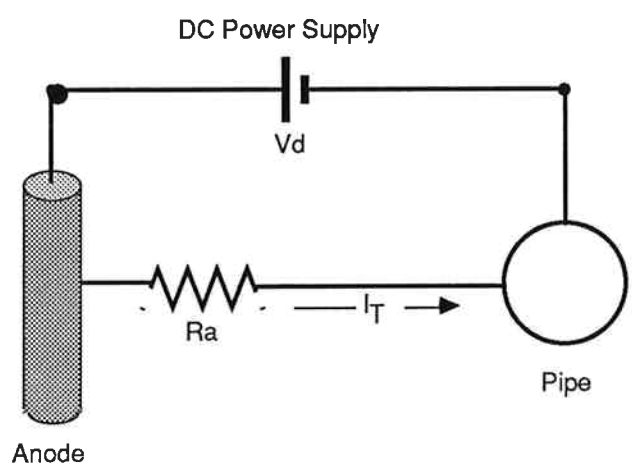

Figure 3 - Equivalent Circuit of an Impressed Current Cathodic Protection System

3.4 Calculation of Anode Life

The useful life of an anode can be calculated as follows:

$$\text{Life (in years)} = \frac{W \cdot E \cdot UF}{C \cdot I_a} \qquad \ldots \{10\}$$

where:

	C = consumption rate	... see Table 3
	I_a = anode current	
	W = weight of anode core	
	E = efficiency	... see Table 3
	UF = utilization factor	... see Table 3

The consumption rate of an anode is the weight loss it experiences due to corrosion while transfering or producing a unit of charge. Anode efficiency is the percentage of this charge which can be delivered to the structure being protected, since some of the anode's capacity is lost through self-corrosion. Impressed current anodes, being corrosion resistant, experience very little self-corrosion and therefore have theoretical efficiencies of close to 100%. The utilization factor takes into account that once the majority of the anode has been consumed, the anode can no longer produce sufficient current to protect the structure, and has therefore reached the end of its useful life.

For precious metal and mixed oxide anodes, the anode weight used in equation {10} is the weight of the cladding only (eg. the weight of platinum in a platinum-clad anode). For wire and cylindrical anodes, this can be calculated as follows:

$$\text{Cladding Weight} = \pi \cdot D \cdot L \cdot t \cdot d \qquad \ldots \{11\}$$

where: D = density of cladding material

L = anode length

t = cladding thickness

d = anode diameter

For an anode installed in metallurgical coke backfill, electrolytic conduction takes place at the interface between the backfill and the soil rather than between the anode and the backfill. The effective life of the anode is therefore extended as follows:

$$\text{Anode Life} = \text{Anode Core Life} + \text{Coke or Metallurgical Backfill Life} \quad \ldots \{12\}$$

In this case, the service life of the core and the backfill are both calculated using equation {10}.

Table 3 in Appendix A lists anode life factors for a variety of sacrificial and impressed current anodes.

4.0 REFERENCES

1. **Tagg, G.F.** *Earth Resistances*, New York: Pitman Publishing, 1964.

2. **Baeckmann, W. von.** *Handbook of Cathodic Protection.* Surrey, England: Portcullis Press, 1975.

3. **Peabody, A.W.** *Control of Pipeline Corrosion.* Houston, Texas: National Association of Corrosion Engineers, 1967.

4. **Gummow, R.A. and Meyers, J.R.** *Corrosion Mitigation by Cathodic Protection.* Houston, Texas: National Association of Corrosion Engineers, 1986.

APPENDIX A – ANODE DATA TABLES

TABLE 1 – TYPICAL ANODE RESISTANCES (ρ=1000 Ω-cm; Depth=60")

Anode Type		Dimensions (inches)		Anode Resistance (ohms)			
		Bare Anode	Package	Bare		Packaged	
				Vert.	Horiz.	Vert.	Horiz.
Mag.	9-14	3.5 x 13	6.2 x 17	9.9	8.4	6.5	5.4
	17-20	3.5 x 25	6.2 x 30	6.9	6.2	5.0	4.4
	32-22	5.5 x 22	8.2 x 30	6.1	5.3	4.4	3.8
	20-60	2.5 x 59	5.2 x 62	4.3	4.0	3.4	3.2
Zinc	6-12	1.4 x 12	4.0 x 20	15	13.5	7.4	6.5
	12-24	1.4 x 24	4.0 x 30	9.4	8.7	5.9	5.3
	24-48	1.4 x 48	4.0 x 60	5.7	5.4	3.7	3.5

Note: Anode resistances can be assumed to vary proportionately with soil resistivity.

TABLE 2 – ANODE DRIVING VOLTAGES

Alloy	Vd (volts)
Zinc	0.25
Low Potential Magnesium (AZ63)	0.7
High Potential Magnesium (M1)	0.9

TABLE 3 – ANODE LIFE FACTORS

Anode Material	Type	(lbs./A-yr.)	UF	E
Zinc	Sacrificial	24	0.9	0.9
Magnesium	Sacrificial	8.6	0.9	0.5
Graphite	Impressed	1.5	0.66	1
High Silicon Cast Iron	"	1.0	0.50	1
Magnetite	"	0.1	0.40	1
Platinum	"	0.00002	0.85	1
Mixed Oxide	"	0.004	0.85	1
Coke Breeze	"	2.0	0.66	1

APPENDIX B - EFFECT OF ANODE BACKFILL

The actual resistance to remote earth of a packaged anode is calculated as the sum of the resistances between the anode and the package, plus that between the package and remote earth. The first of these terms can be calculated as the resistance of the core to remote earth in a medium having a resistivity equivalent to that of the backfill, minus the resistance of the package in this same medium.

$$R_{anode} = R_{package\text{-}to\text{-}remote\ earth} + R_{core\text{-}to\text{-}infinite\ backfill} - R_{package\text{-}to\text{-}infinite\ backfill}$$

For example, a packaged '32-22' magnesium anode installed vertically at a depth of 1m in 3000 ohm-cm soil would have a resistance of:

$$R = \frac{\rho}{2\pi L} \ln\left(\frac{2L}{d}\sqrt{\frac{4D+3L}{4D+L}}\right) + \frac{\rho'}{2\pi L'} \ln\left(\frac{2L'}{d'}\sqrt{\frac{4D'+3L'}{4D'+L'}}\right) - \frac{\rho'}{2\pi L} \ln\left(\frac{2L}{d}\sqrt{\frac{4D+3L}{4D+L}}\right)$$

Where:

D = 100cm	D' = 110cm
L = 76.2cm	L' = 56cm
d = 20.8cm	d' = 14cm
ρ = 3000 ohm-cm	ρ' = 50 ohm-cm

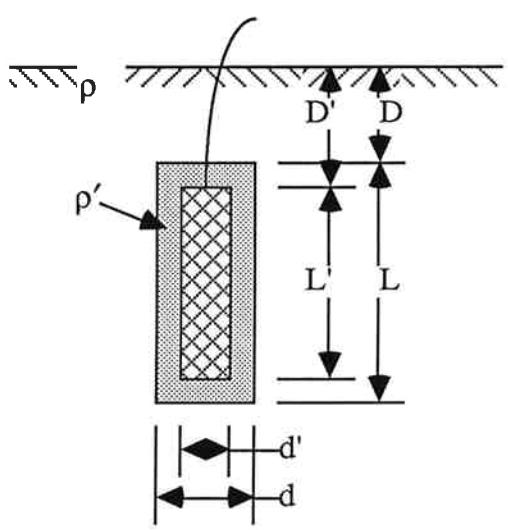

Therefore:

$$R = 13.3 + [0.3 - 0.2]$$

$$= 13.4 \text{ ohms}$$

The resistance of the package to remote earth is given by the first term and accounts for more than 99% of the total anode resistance. It is therefore a safe assumption to calculate anode resistance based on the package dimensions when the resistivity of the backfill is much less than that of the native soil.

APPENDIX C - EFFECT OF ANODE-TO-PIPE SEPARATION

Ideally, the resistance of an anode to remote earth is its resistance measured with respect to a zero-resistance reference electrode located an infinite distance away.

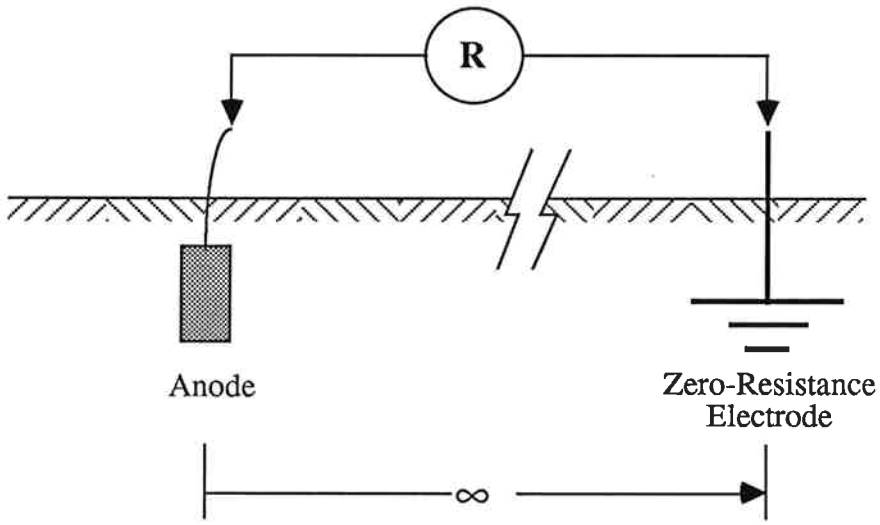

For simplicity, if the anode is considered to be a hemisphere embedded in the soil, its resistance can be considered as being the sum of the resistances of concentric shells of earth.

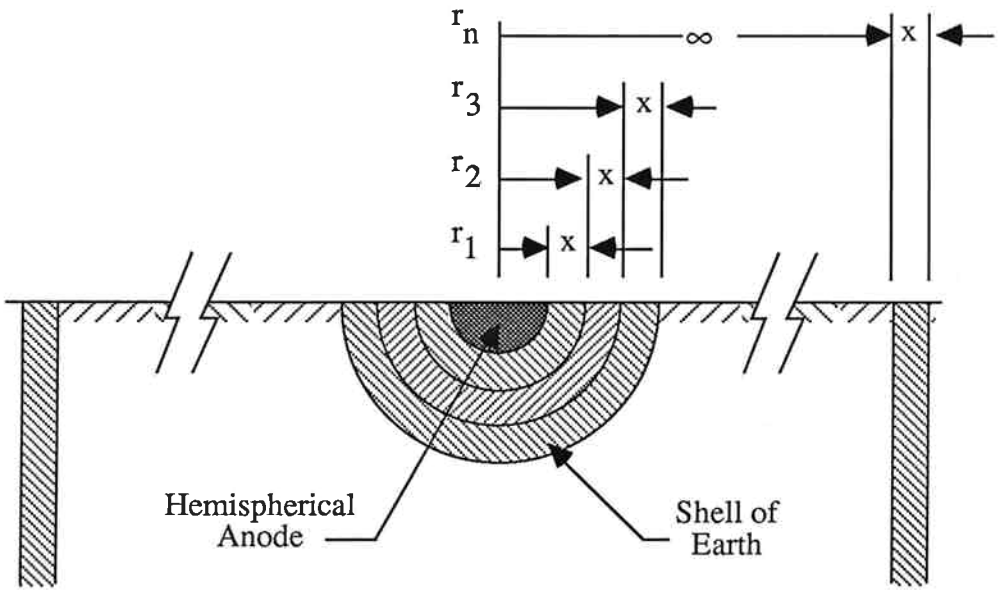

As with any electrical resistor, the resistance of a shell of earth is the product of its resistivity and its length, divided by its cross-sectional area. Therefore, the resistance of the anode to remote earth will be:

$$R = \frac{\rho \cdot x}{4\pi r_1^2} + \frac{\rho \cdot x}{4\pi r_2^2} + \ldots + \frac{\rho \cdot x}{4\pi r_n^2}$$

$$= \frac{\rho \cdot x}{4\pi}\left(\frac{1}{r_1^2} + \frac{1}{r_2^2} + \ldots + \frac{1}{r_n^2}\right)$$

For shells of earth a great distance away from the anode, their cross-sectional areas are so large that their resistances are essentially zero compared to the shells located close to the anode. The cumulative effect of these shells is shown in the figure below.

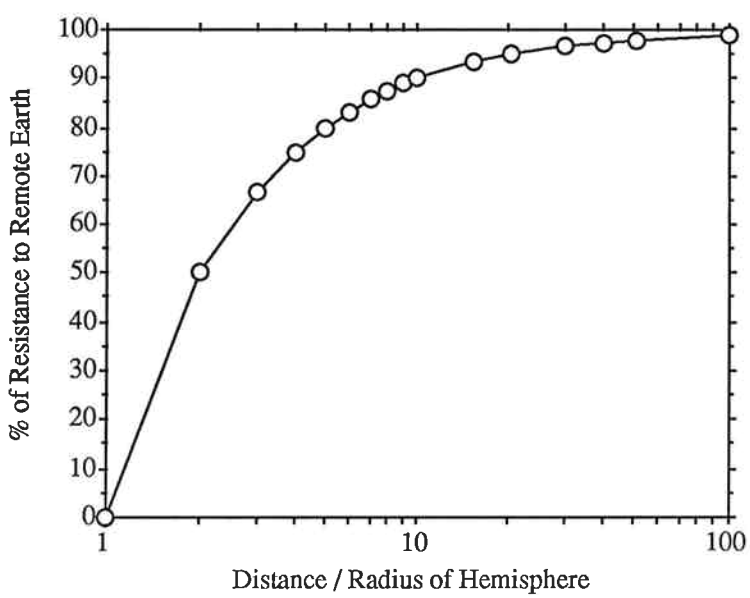

Effect of Distance from Hemispherical Anode on Anode Resistance

It can be seen that 50% of the anode's resistance lies within a distance of two radii from the centre of the anode, and that 90% of the resistance is within 10 radii of the anode. This relationship also applies for cylindrical anodes, where the anode radius is taken to be its equivalent radius (ie. the radius of a hemisphere having the same resistance as the anode).

An anode located remote from a water distribution system will have a resistance to this system approximately equal to its resistance to remote earth, since an extensive metallic water piping system essentially has a zero resistance to remote earth itself. As the anode is brought closer to the piping, this resistance decreases at approximately the same rate shown on the above figure. To illustrate the point of this discussion, consider the case of a '32-22' magnesium anode buried vertically above a watermain at a depth of 1m. The equivalent radius of the anode is

$$r_{eq} = \frac{\rho}{2\pi R}$$

$$= \frac{\rho}{2\pi\left(\frac{\rho}{2\pi L}\ln\frac{2L}{d}\sqrt{\frac{4D+3L}{4D+L}}\right)}$$

$$= \frac{L}{\ln\frac{2L}{d}\sqrt{\frac{4D+3L}{4D+L}}}$$

where: $L = 76.2$ cm

$d = 20.8$ cm

$D = 50$ cm

therefore:

$$r_{eq} = 35.8 \text{ cm}$$

Using the anode resistance vs. distance relationship above, the anode-to-pipe resistance varies with anode-to-pipe separation as shown in the figure below.

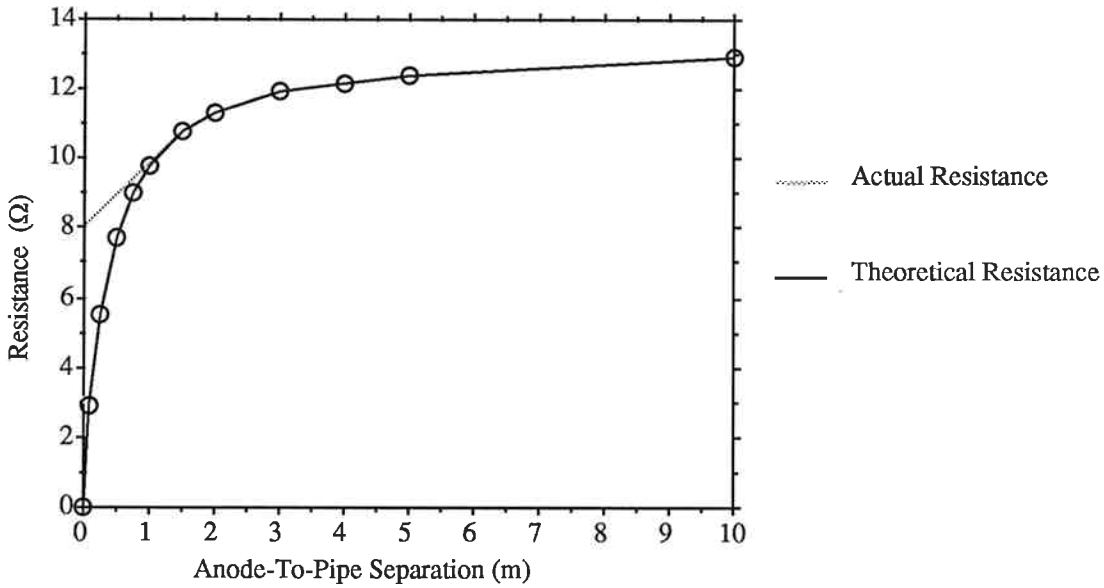

Effect of Anode-to-Pipe Separation on Anode Resistance

The theoretical curve predicts that if the anode is located 0.5m above the pipe, its resistance would be 60% of that to remote earth, and if it was 1m above, the resistance would be 75% of that to remote earth. This is a worst-case estimate for two reasons. Firstly, the pipe will presumably not be completely bare, which effectively increases the anode-to-pipe separation. Secondly, it does not distinguish between electrolytic or electronic conduction, whereas the anode-to-pipe resistance which is important in this situation, is the resistance to electrolytic current flow only. Obviously, even if the anode core were in direct contact with the pipe, it would still have a non-zero resistance across the electrolyte to the pipe surface. This effect is approximated by the dotted curve of the actual resistance in the figure above.

APPENDIX D – DESIGN EXAMPLES

Design Problem #1:

Design a cathodic protection system to protect the 6" diameter x 12' long hydrant assemblies and the 3/4" diameter x 60' long copper water services on a non-metallic water distribution system. The soil resistivity is 3000 ohm-cm and a minimum anode life of 25 years is required.

a. Current Requirements:

Hydrant:

$$I_H = \pi(0.5 \text{ ft.})(12 \text{ ft.}) \times 1 \text{ mA/ft.}^2$$
$$= 18.8 \text{ mA}$$

Service:

$$I_S = \pi(0.0625 \text{ ft.})(80 \text{ ft.}) \times 1 \text{ mA/ft.}^2$$
$$= 15.7 \text{ mA}$$

Since the current requirements are relatively low, a single packaged zinc anode can probably be used for both the service piping and the hydrant assemblies.

b. Maximum Allowable Anode Resistance:

Hydrant:

$$R_{max} = V_d / I_a$$
$$= 250 \text{ mV} / 18.8 \text{ mA}$$
$$= 13.3 \text{ ohms}$$

Service:

$$R_{max} = 1250 \text{ mV} / 15.7 \text{ mA}$$
$$= 80 \text{ ohms}$$

Note: The driving voltage is higher when protecting copper service piping since its criterion for protection is only -500mV with respect to a copper sulphate reference.

c. Anode Selection:

From Table 1, a horizontal 12-24 zinc anode is found to have a resistance of 5.3 ohms in 1000 ohm-cm soil. Therefore, in 3000 ohm-cm soil:

$$R_a = 5.3 \times 3000/1000$$
$$= 15.9 \text{ ohms}$$

which satisfies the anode resistance requirement for the hydrant fitting. The actual anode current is consequently:

$$I_a = V_a / R_a$$
$$= 250 \text{ mV} / 15.9 \text{ ohms}$$
$$= 15.7 \text{ mA}$$

Similarly, a 24-48 zinc anode will have a resistance of

$$R_a = 3.5 \times 3000/1000$$
$$= 10.5 \text{ ohms}$$

and a current of

$$I_a = 600 \text{ mV} / 10.5 \text{ ohms}$$
$$= 57 \text{ mA}$$

d. Anode Life:

Hydrant:

$$L = (12 \text{ lbs.} \times 0.9 \times 0.9) / (24 \text{ lbs.} / \text{A-yr.} \times 0.0157\text{A})$$
$$= 25.8 \text{ years}$$

Service:

$$L = (24 \text{ lbs.} \times 0.9 \times 0.9) / (24 \text{ lbs.} / \text{A-yr.} \times 0.057\text{A})$$
$$= 14.2 \text{ years}$$

The design requirements have been met for the hydrant assembly, but the anode life requirement cannot be met using standard zinc anodes for the copper services.

Design Problem #2:

Design a cathodic protection system to protect 1000' of existing 8" diameter watermain, including 2000' of 3/4" diameter copper water service in 5000 ohm-cm soil using 32 lb. magnesium anodes.

a. Current Requirements:

I_T = π (pipe diameter x pipe length + service diameter x service length) x 1mA/ft^2

= π (8"/12" x 1000' + .75"/12" x 2000')

= 2500 mA

b. Anode Resistance:

From Table 1, a 32-22 horizontal anode has a resistance of 4.4 ohms in 1000 ohm-cm soil. Therefore:

R_a = 4.4 x 5000/1000

= 22 ohms

c. Anode Current:

$I_a = V_d / R_a$

= 900 mV / 22 ohms

= 40 mA

d. Number of Anodes Required:

N = 2500 mA / 40 mA

= 62 anodes

e. Spacing of Anodes:

S = 1000' / 62

= 16 ft.

f. Anode Life:

L = (32 lb x 0.5 x 0.9) (0.04A x 8.6 lb/A-yr)

Design Problem #3:

Design an impressed current cathodic protection system to protect 1000' of 8" diameter watermain in 5000 ohm-cm soil, including an unknown amount of service piping, bare concentric neutral cables, and ground rods. A current requirements test indicates that a total of 4A is required and that it is best distributed using two sources of current.

a. Groundbed Design:

As an initial guess, each groundbed shall consist of a 110 lb. silicon iron anode installed in a 12' deep by 1' diameter augered hole filled with 8' of cokebreeze.

$$R_a = \frac{5000\ \Omega\text{-cm}}{2 \times \pi \times 8' \times 30.5\ \text{cm/ft}} \ln\left(\frac{2 \times 8'}{1'}\sqrt{\frac{4 \times 4' + 3 \times 8'}{4 \times 4' + 8'}}\right) = 9.9\ \text{ohms}$$

b. Mininum Required Rectifier Size:

$$I_R = 4.0A / 2\ \text{sources} = 2.0A$$

$$V_R = 2A \times 9.9\ \text{ohms} = 20V$$

c. Spacing of Current Sources:

$$S = 1000'/2 = 500'$$

The current sources should therefore be located 250' from each end of the 1000' watermain.

d. Groundbed Life:

(The cokebreeze required to fill the hole weighs 350 lbs.)

Anode Life = (110 lbs x 0.5) (1.0 lb/A-yr x 2.0A)
= 27.5 years

Cokebreeze Life = (350 lbs x 0.66) / (2.0 lbs/A-yr x 2.0A)
= 58 years

Groundbed Life = 27.5 years + 58 years
= 85.5 years

Although this design is adequate, the groundbed has been overdesigned. A smaller anode should therefore be selected, and the calculations repeated.